G Johns & Sons Ltd
Unit D Westside Business Centre
Flex Meadow
Harlow, Essex
CM19 5SR

www.gjohns.co.uk
020 8360 7771
sales@gjohns.co.uk

VAT No: GB232661872
Company No: 00384076

Maddox Profile Handle Edge Pull - 45mm Width - Satin Chrome

Product Images

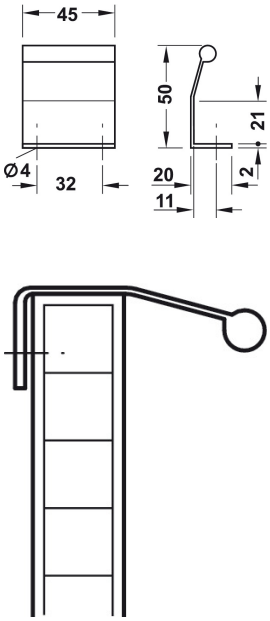

Description

- Rear fix finger edge pulls are designed to look stylish and discrete

Size Details

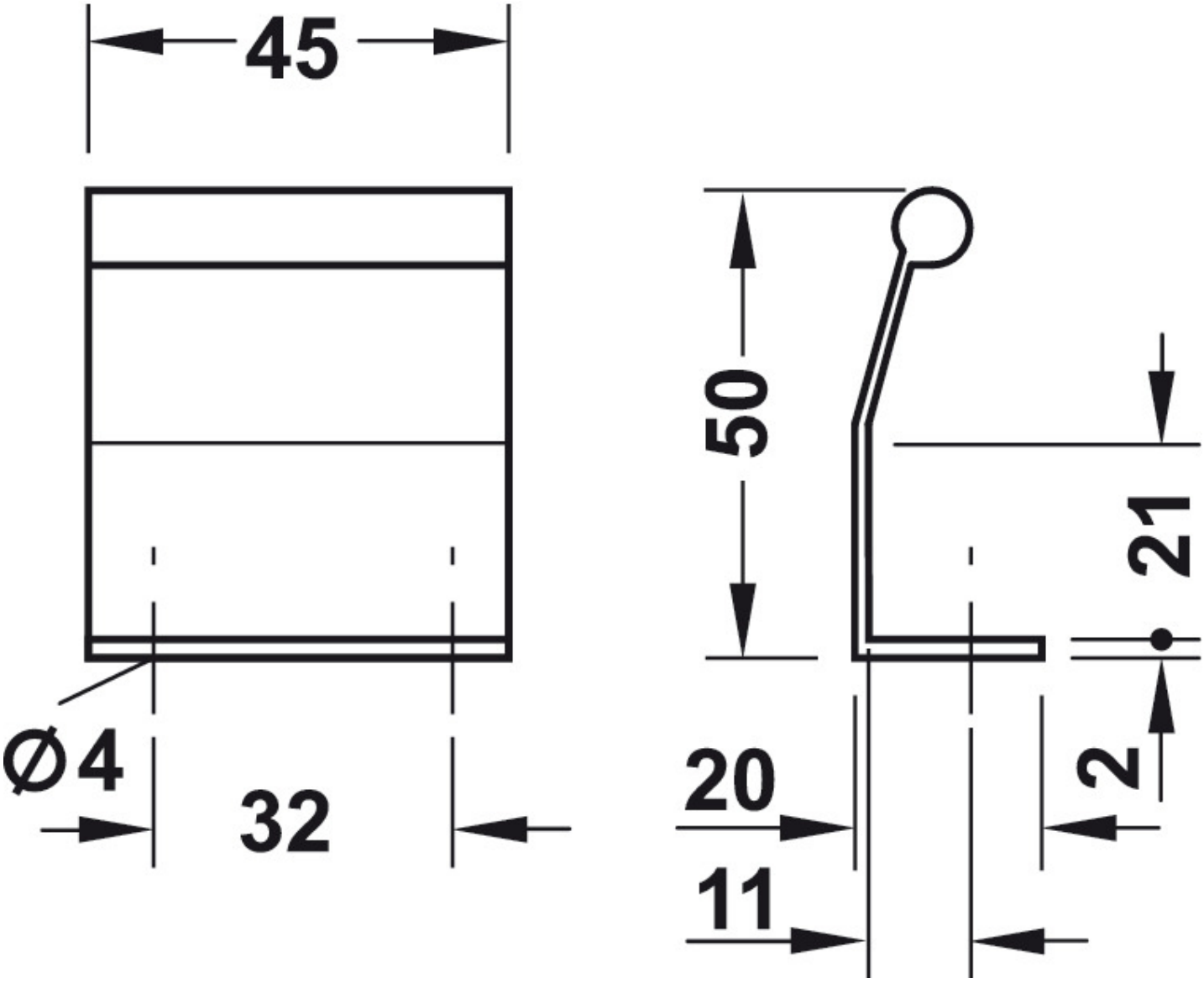

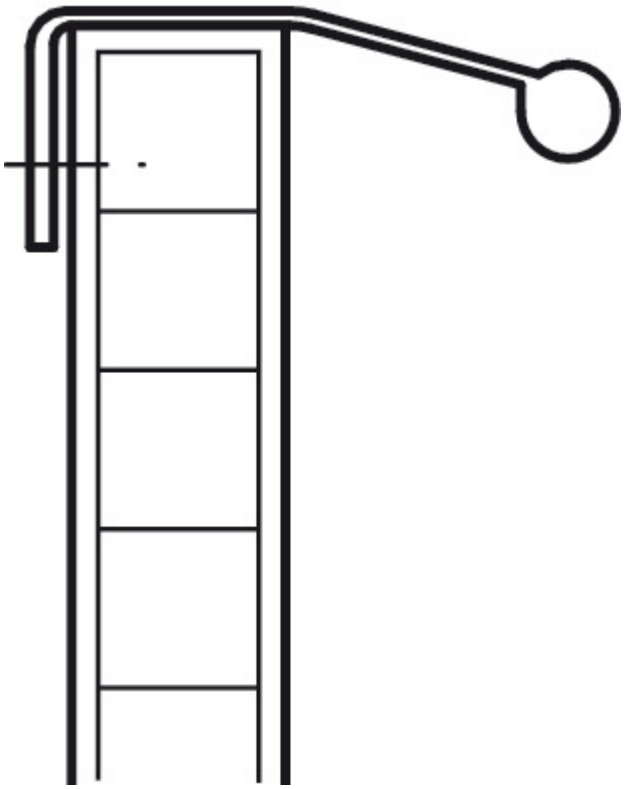

- Length - 45mm

- Hole spacing - 32mm
- Height - 20mm
- Depth - 50mm

Base Material

- Zinc alloy

Finish Details

- Matt chrome

Usage

- Suitable for internal use.

Unit Of Sale

- This cabinet handle is sold individually - (Each)

Products in this set

44312.1 - Maddox Profile Handle Edge Pull - 45mm Width - Satin Chrome - Each