G Johns & Sons Ltd
Unit D Westside Business Centre
Flex Meadow
Harlow, Essex
CM19 5SR

www.gjohns.co.uk
020 8360 7771
sales@gjohns.co.uk

VAT No: GB232661872
Company No: 00384076

Period Range Inner Flap Letter Plate Cover - 265mm x 130mm - Aged Solid Bronze

Product Images

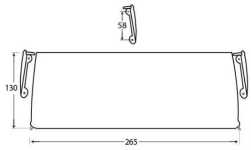

Description

- Period Small Letter Plate Cover
- Our traditional letter plate covers are an attractive option for numerous door types
- To be fitted to the internal side of the door

Finish

- Aged Bronze

Dimensions

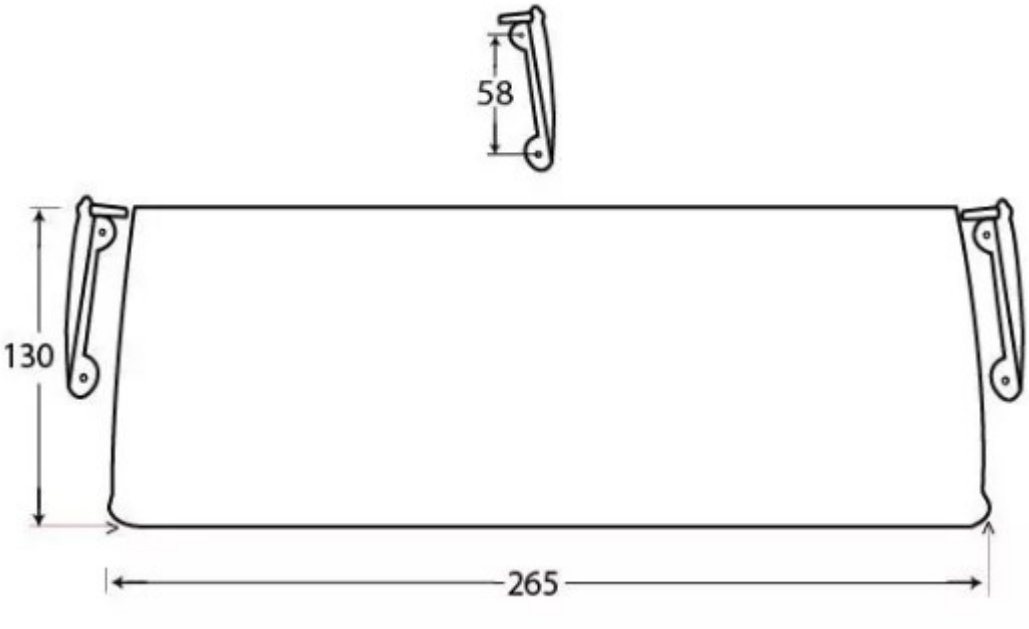

- Overall Size: 265mm x 130mm
- Fixing Size: 78mm x 12mm
- Designed to cover the hole on the inside of the front door where the letter plate has been cut out for.
- Letter tidy plates have a curved shape which allows them to sit on top of the fixing bolts and domed nuts used to secure a letter plate in place.
- Screw fixes to the back of the front independently of the letter plate.

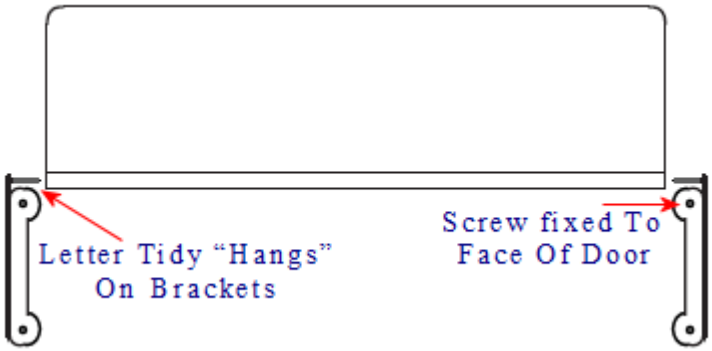

Important Info Before You Buy

- Comes supplied with fixing screws and two brackets hanging brackets.
- For the right size letter tidy - Make a note of the distance between the bolt centers of your letter plate and the height of the aperture. Choose a letter tidy that is slightly longer and higher to make sure you cover the hole and bolts in the door

Products in this set

48983.1 - Period Small Letter Plate Cover - 265mm x 130mm - Aged Solid Bronze - Each