G Johns & Sons Ltd
Unit D Westside Business Centre
Flex Meadow
Harlow, Essex
CM19 5SR

www.gjohns.co.uk
020 8360 7771
sales@gjohns.co.uk

VAT No: GB232661872
Company No: 00384076

Sash Lift - Polished Brass Unlacquered

Product Images

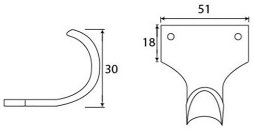

Description

- Handle for sliding sash window - sash lift
- A sash lift is the handle used to lift or pull the sliding sash window open
- Fitted to the bottom of a sash window and usually in pairs.

Finish

- Polished Brass Unlacquered

Dimensions

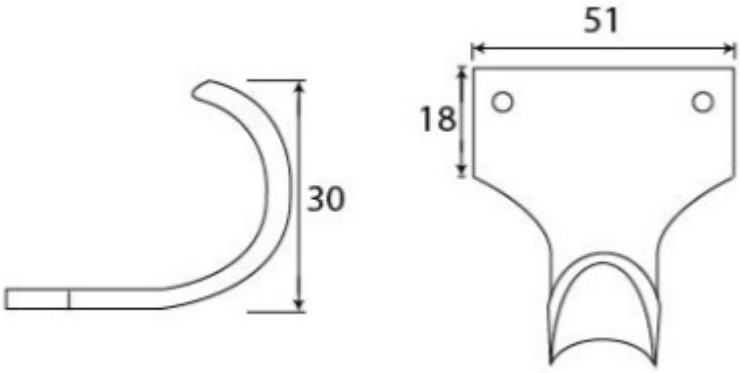

- Fixing plate: 51mm x 18mm
- Projection: 30mm

Important Info Before You Buy

- Suitable for wooden sliding sash windows
- Usually two lifts used per window
- SOLD INDIVIDUALLY

Products in this set

49164.1 - Sash Lift - 51mm x 18mm - Polished Brass Unlacquered - Each