G Johns & Sons Ltd
Unit D Westside Business Centre
Flex Meadow
Harlow, Essex
CM19 5SR

www.gjohns.co.uk
020 8360 7771
sales@gjohns.co.uk

VAT No: GB232661872
Company No: 00384076

Traditional Design Handrail Bracket - 90mm Projection - Polished Brass (Lacquered)

Product Images

Description

- Traditional design handrail bracket.
- Fixings included.
- Suitable for flat based handrails.

Finish

- Polished brass.

Alternative Finishes Available

- Polished chrome.
- Satin chrome.

Dimensions

- Projection - 90mm
- Rose (Backplate) Diameter - 57mm

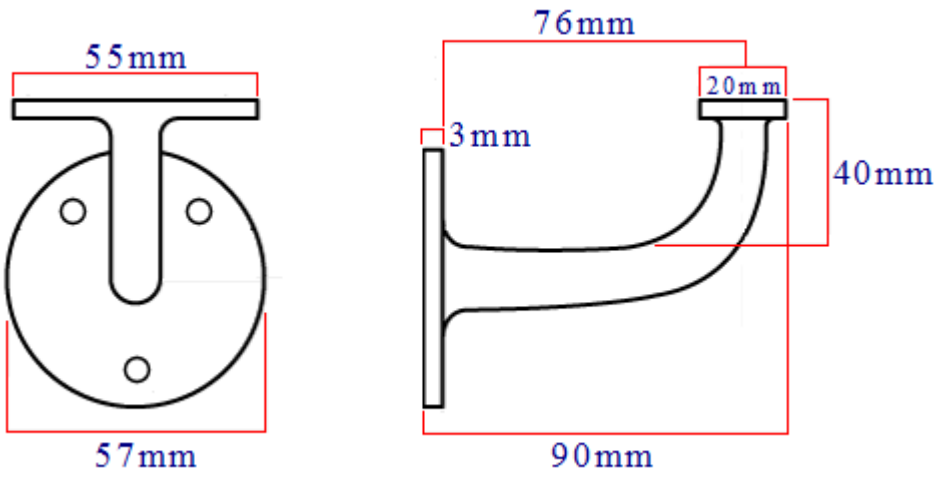

Products in this set

20783.1 - Traditional Design Handrail Bracket - 90mm Projection - Polished Brass (Lacquered) - Each