G Johns & Sons Ltd
Unit D Westside Business Centre
Flex Meadow
Harlow, Essex
CM19 5SR

www.gjohns.co.uk
020 8360 7771
sales@gjohns.co.uk

VAT No: GB232661872
Company No: 00384076

Oval Shape Flush Pull Handle - Tested For Use On FD30 Fire Doors - 120mm x 40mm - Polished Stainless Steel

Product Images

Description

- Contemporary design oval shape flush fitting, inset pull handle for sliding doors.
- Made from stainless steel this item is a polished (shiny) finish.
- This item has to be morticed (cut) into the door to allow it to sit fit flush.
- Suitable for use on full height sliding doors, wardrobe doors and cupboard doors.

- Sleek minimal look thanks to discreet fixings. - (This item is fixed via wood screws from inside the recess.)

- Available in one size only - 120mm x 40mm

- Test for use on FD30 timber fire doors (please check test evidence of your fire door for compatibility).

Size Details

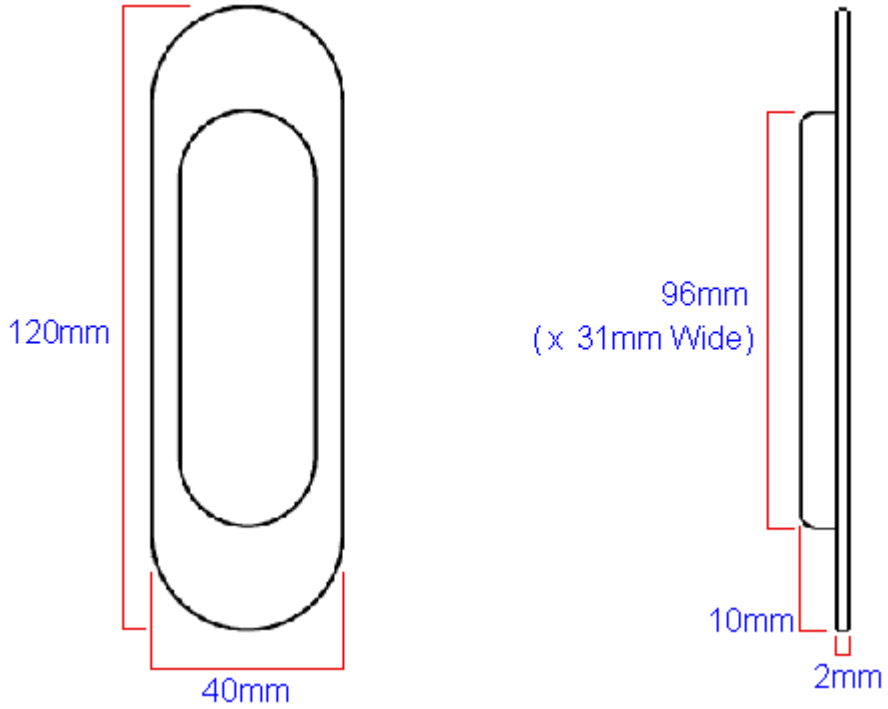

Item Code	Height	Width	Recess Depth	Recess Height	Recess Width	Backplate Thickness
21820.1	120mm	40mm	10mm	96mm	31mm	2mm

Base Material

- Made from stainless steel.

Finish Details

- Polished stainless steel - a highly shiny mirror like finish with a very slight golden undertone. The raw stainless steel has been highly polished to produce a shiny mirror finish.
- For more information and how to care for this finish please see our guide to product Finish.

Alternative Finishes Available

- Satin stainless steel - (Brushed finish).

Fixings

- This handle is fitted via 2 x wood screws inside the recess of the handle.
- Screws are supplied with this item.

Usage

- Suitable for internal or external use.

externaluse.

- To fit this handle completely flush a minimum door thickness of 18mm is required.

Unit Of Sale

- This item is sold individually - (Each)

Products in this set

21820.1 - Oval Shape Flush Pull Handle - Tested For Use On FD30 Fire Doors - 120mm x 40mm - Polished Stainless Steel - Each